REVISIONS			
REV	DESCRIPTION	DATE	APPROVED

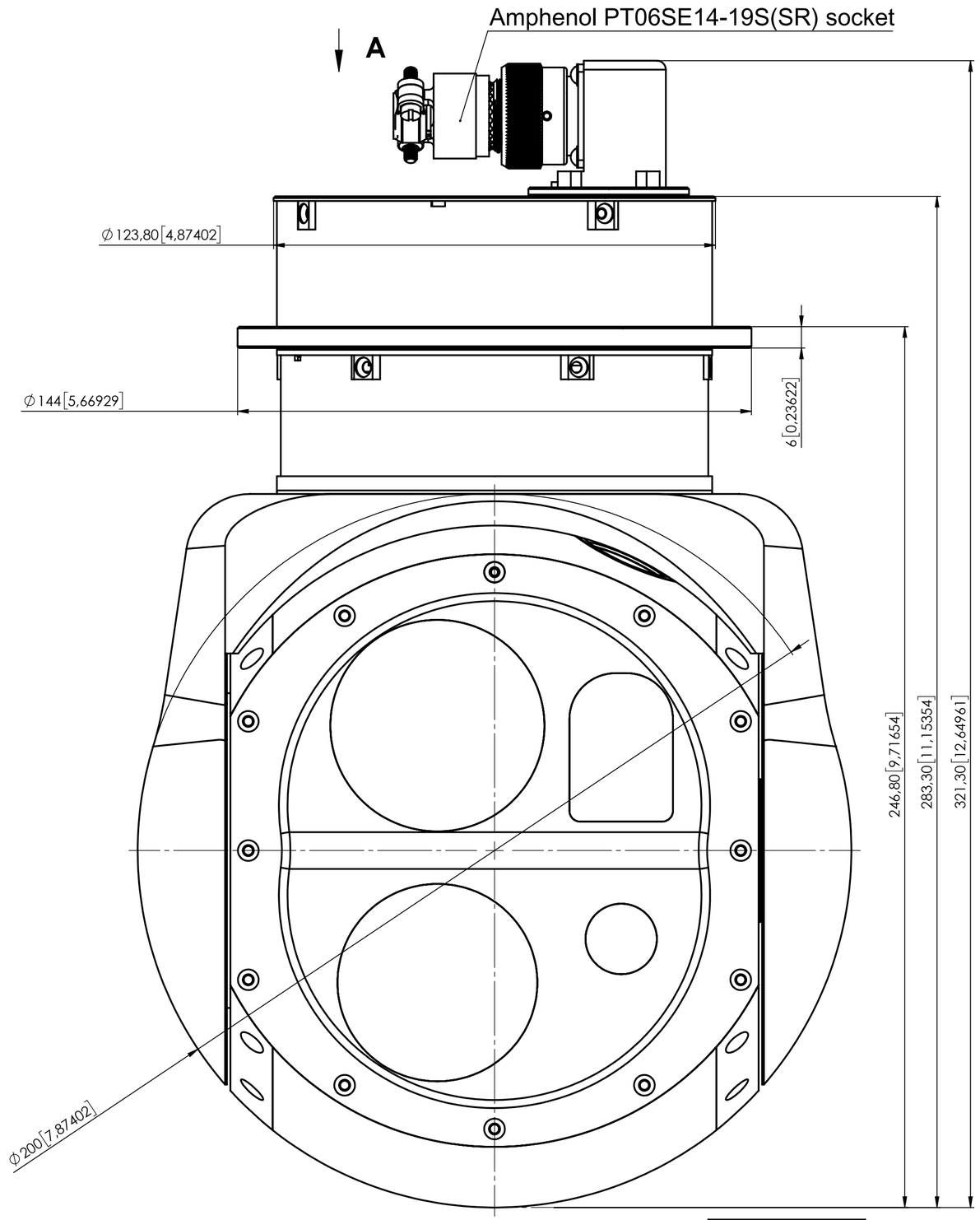

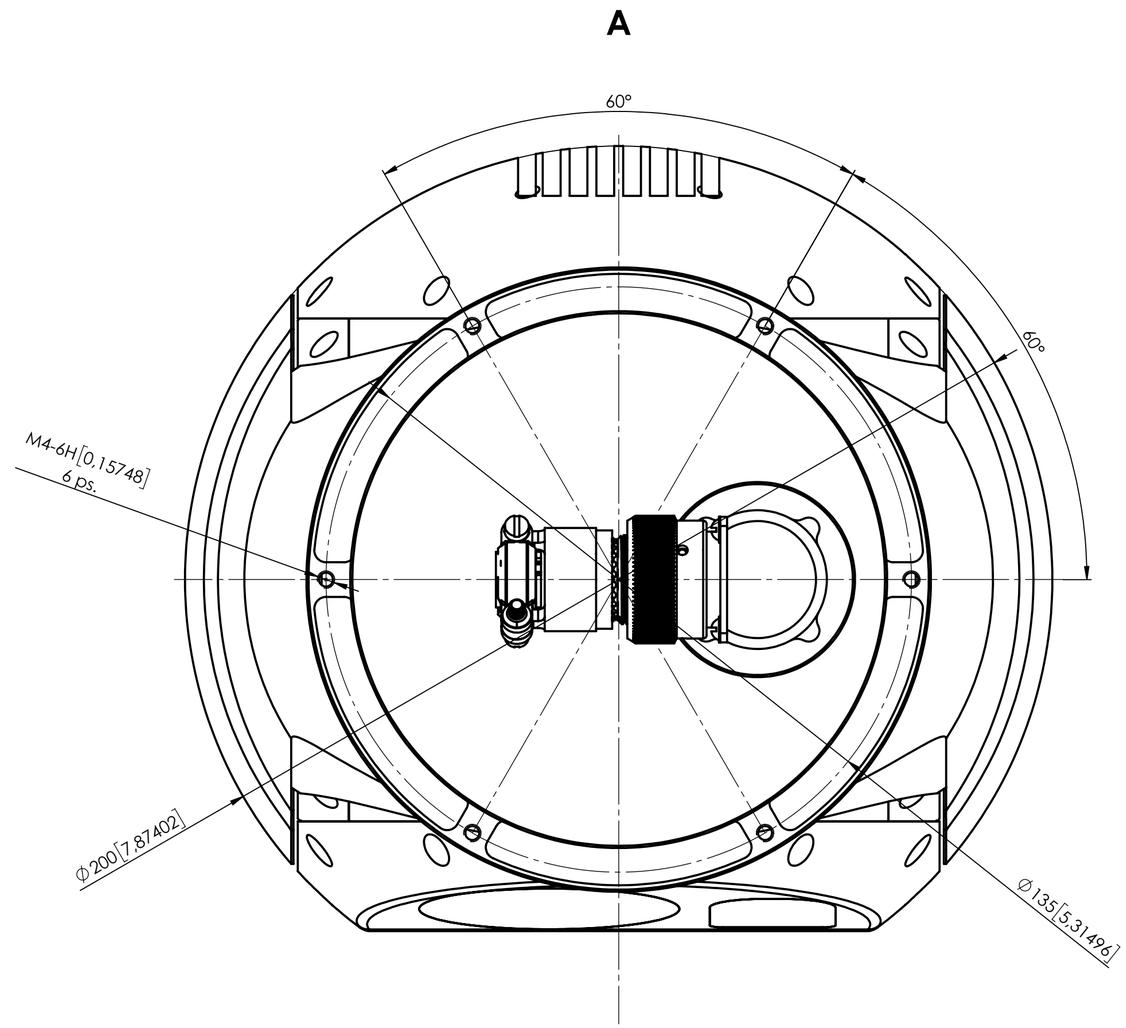

This drawing and any information or descriptive material set out on it are the confidential and copyright property of **UAVOS ©** and MUST NOT BE DISCLOSED, COPIED, LOANED in whole or part or used for any purpose without the written permission of **UAVOS**.

NEXT ASSY	USED ON
APPLICATION	

UNLESS OTHERWISE SPECIFIED
DIM ARE IN MILLIMETERS
[DIM ARE IN INCHES]
TOL ON ANGLES ±**0.5**°
0 PLACE ±**0.5** 1 PLACE ±**0.1**
INTERPRET DIM AND TOL
PER **ASME Y14.5M**
Surface Finish: **Ra3.2**

THIRD ANGLE PROJECTION

DRAFTER		
CHECKER		
DEV ENGR		

CONTRACT NO.
UAVOS FUNDED

MATERIAL

UAVOS

TITLE
GYRO STABILZED TWO-AXIS GIMBAL GSG-201

SIZE	CAGE CODE	DRAWING NUMBER	REV
A2		UV01.467864.29	10
SCALE 1:1	WEIGHT KG 3,5	SHEET 1 OF 1	