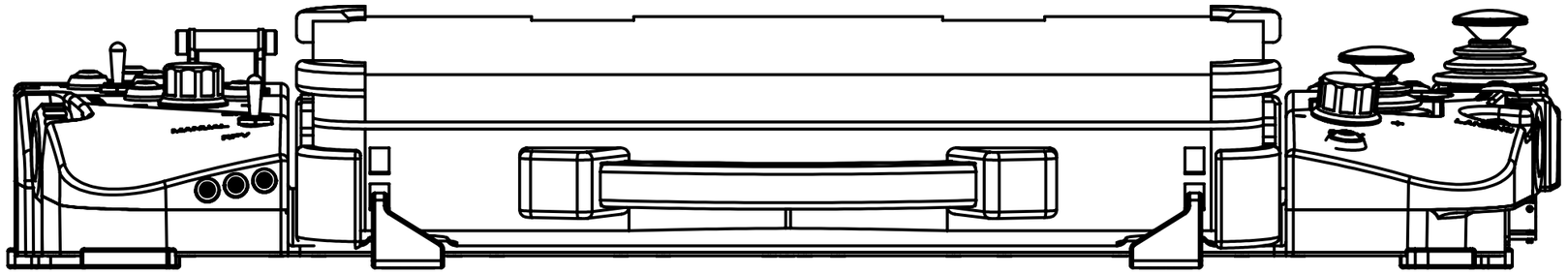

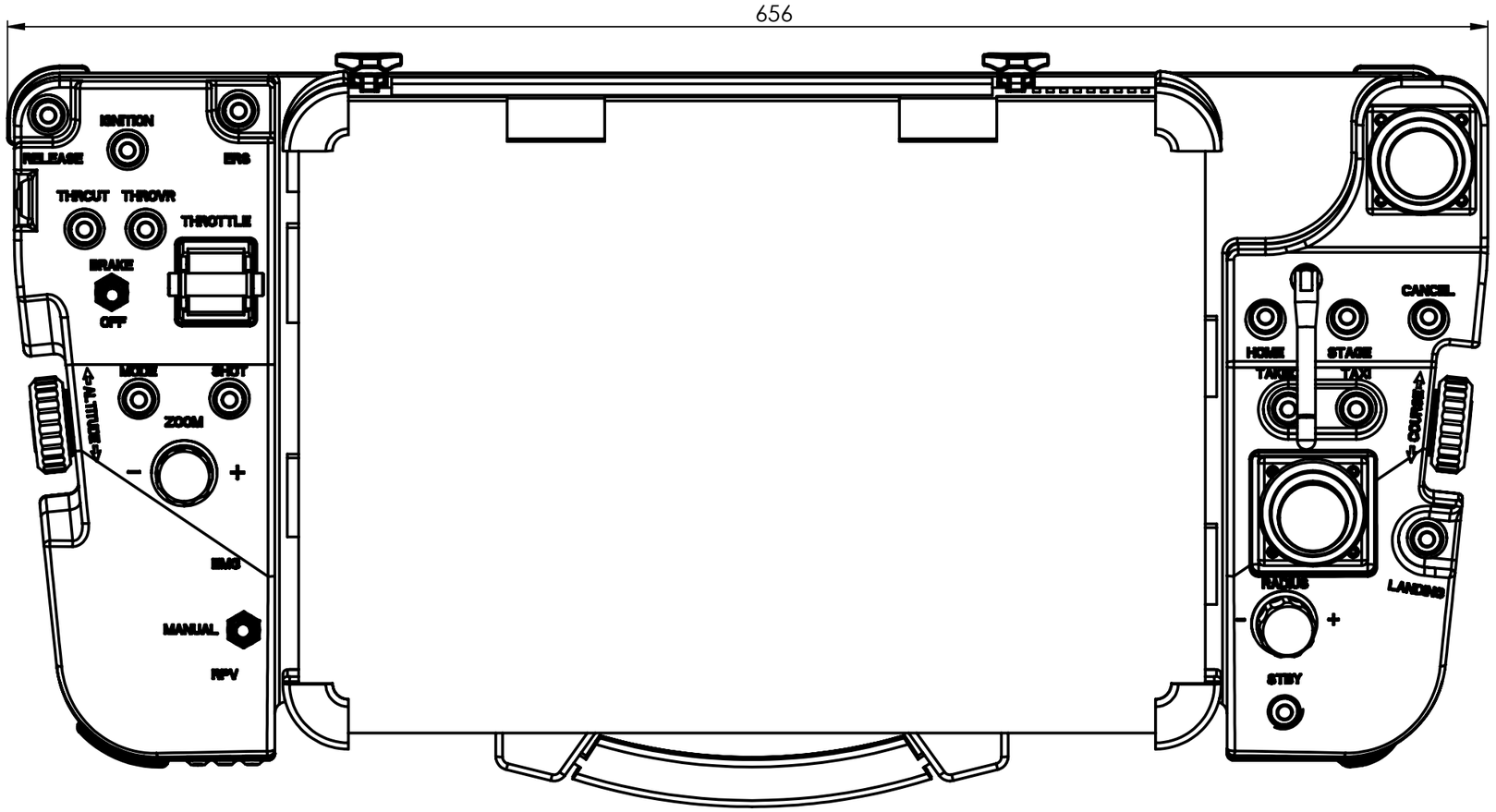

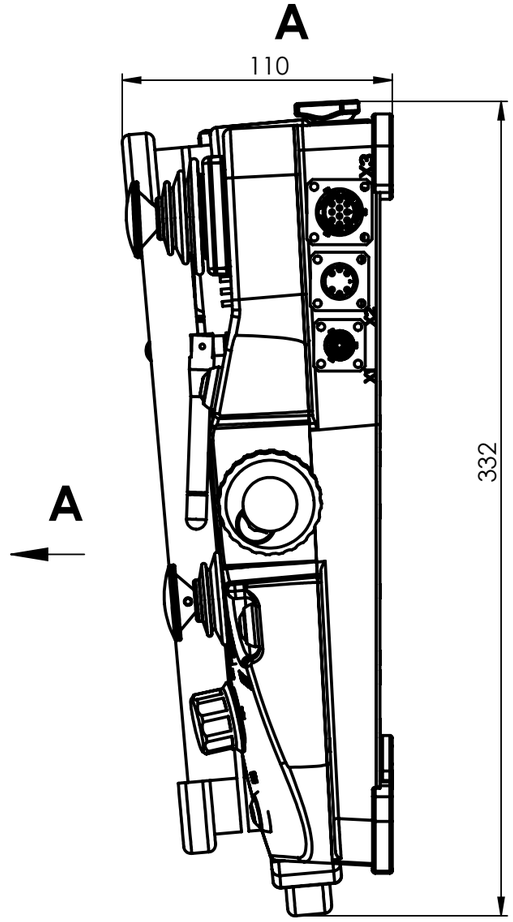

REVISIONS			
REV	DESCRIPTION	DATE	APPROVED

This drawing and any information or descriptive material set out on it are the confidential and copyright property of **UAVOS ©** and MUST NOT BE DISCLOSED, COPIED, LOANED in whole or part or used for any purpose without the written permission of **UAVOS.**

NEXT ASSY	USED ON

APPLICATION

UNLESS OTHERWISE SPECIFIED
DIM ARE IN MILLIMETERS
[DIM ARE IN INCHES]
TOL ON ANGLES ±**0.5°**
0 PLACE ±**0.5** 1 PLACE ±**0.1**
INTERPRET DIM AND TOL
PER **ASME Y14.5M**
Surface Finish: **Ra3.2**

THIRD ANGLE PROJECTION

DRAFTER		
CHECKER		
DEV ENGR		

CONTRACT NO.
UAVOS FUNDED

MATERIAL

UAVOS

UAVOS

TITLE

Portable ground control unit **(PGCU.3)**

SIZE	CAGE CODE	DRAWING NUMBER	REV
A3		UV01.468323.02.00	10

SCALE	WEIGHT KG	SHEET
1:2.5	**9.5**	**1** OF **1**