REVISIONS			
REV	DESCRIPTION	DATE	APPROVED

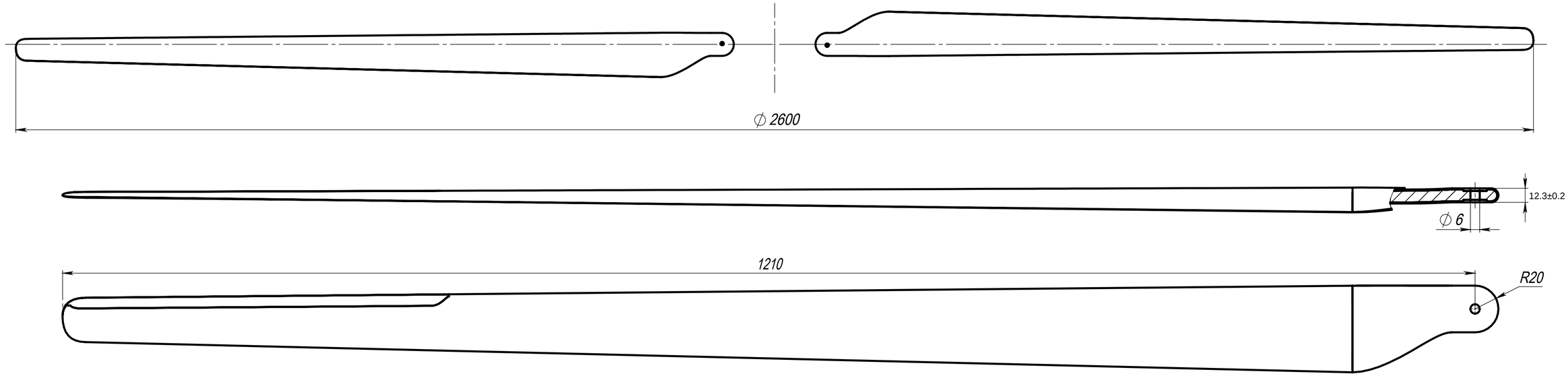

Thrust, N (ß at 75% R=7.8°)

rotor diametr 2600 mm

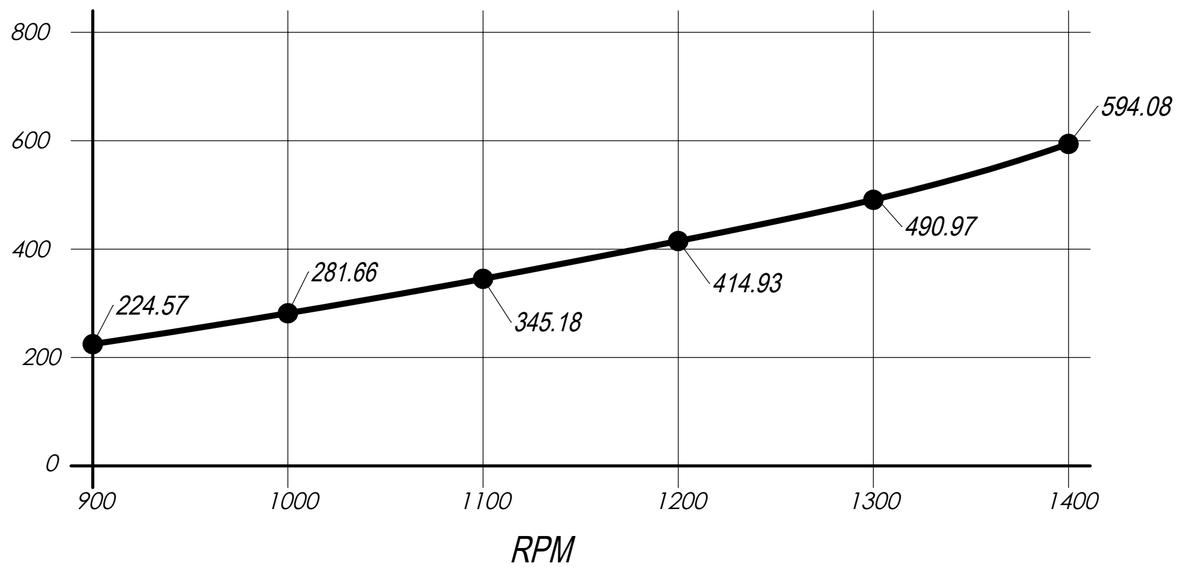

Length	1230 mm
Width	76-38 mm
Thickness	12.5-4.5 mm
Root thickness	12.3±0.2mm
Mounting Hole Diameter	6 mm
Rotation	right
Twist	10°
Material	Carbon fiber(prepreg)
Max.	1300 RPM
MaxTOW (2 blades)	50 kg

This drawing and any information or descriptive material set out on it are the confidential and copyright property of **UAVOS ©** and MUST NOT BE DISCLOSED, COPIED, LOANED in whole or part or used for any purpose without the written permission of **UAVOS**.

NEXT ASSY | USED ON

APPLICATION

UNLESS OTHERWISE SPECIFIED
DIM ARE IN MILLIMETERS
[DIM ARE IN INCHES]
TOL ON ANGLES ±**0.5**°
0 PLACE ±**0.5** 1 PLACE ±**0.1**
INTERPRET DIM AND TOL
PER **ASME Y14.5M**
Surface Finish: **Ra3.2**

THIRD ANGLE PROJECTION

DRAFTER
CHECKER
DEV ENGR

CONTRACT NO.
UAVOS FUNDED

MATERIAL

UAVOS

TITLE
Two - bladed main rotor CW

SIZE	CAGE CODE	DRAWING NUMBER	REV
A2		UV01.29060.01	00

SCALE 1:2.5 | WEIGHT KG | SHEET 1 OF 1