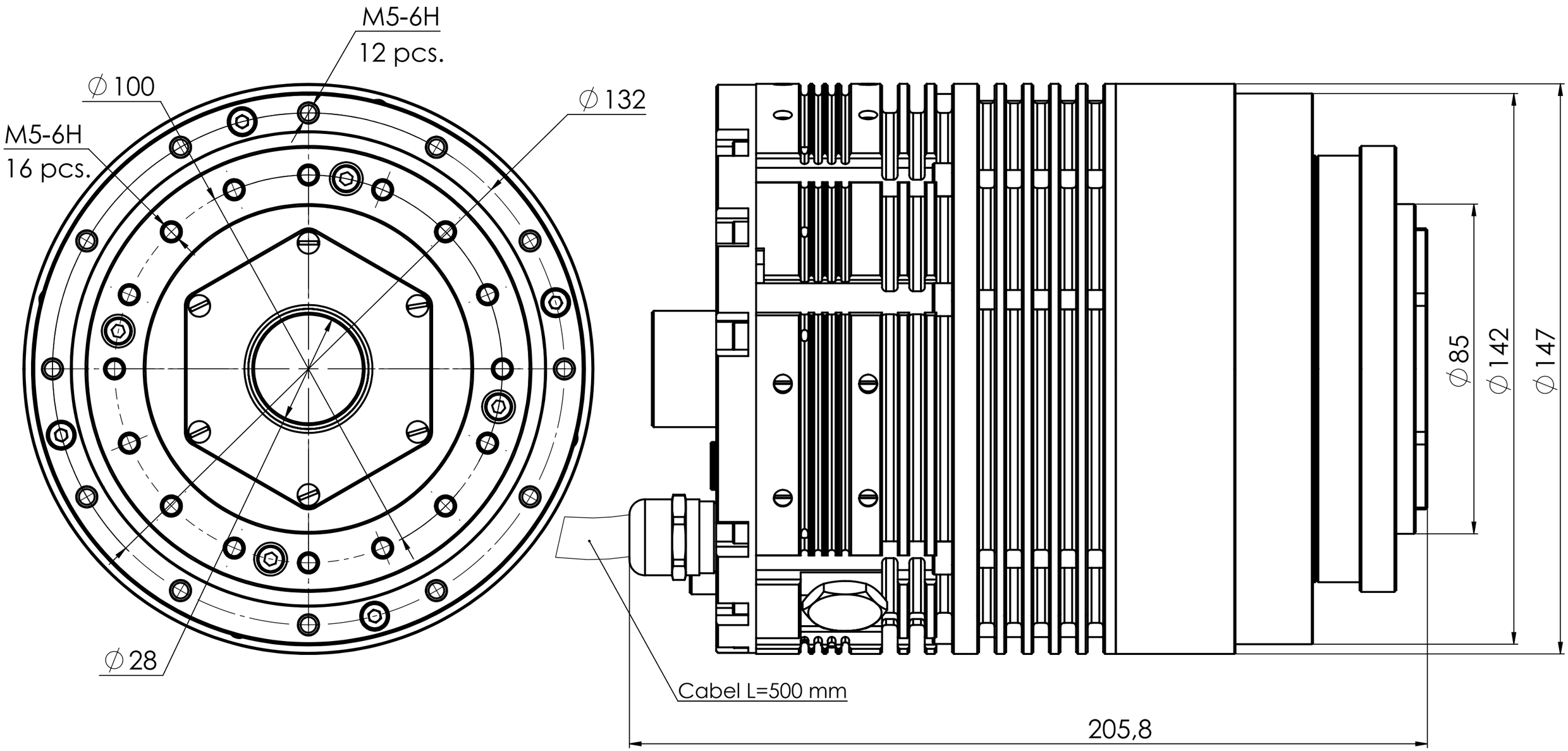
M5-6H
12 pcs.
∅100
∅132
M5-6H
16 pcs.
∅28
∅85
∅142
∅147
Cabel L=500 mm
205,8